snit i CL

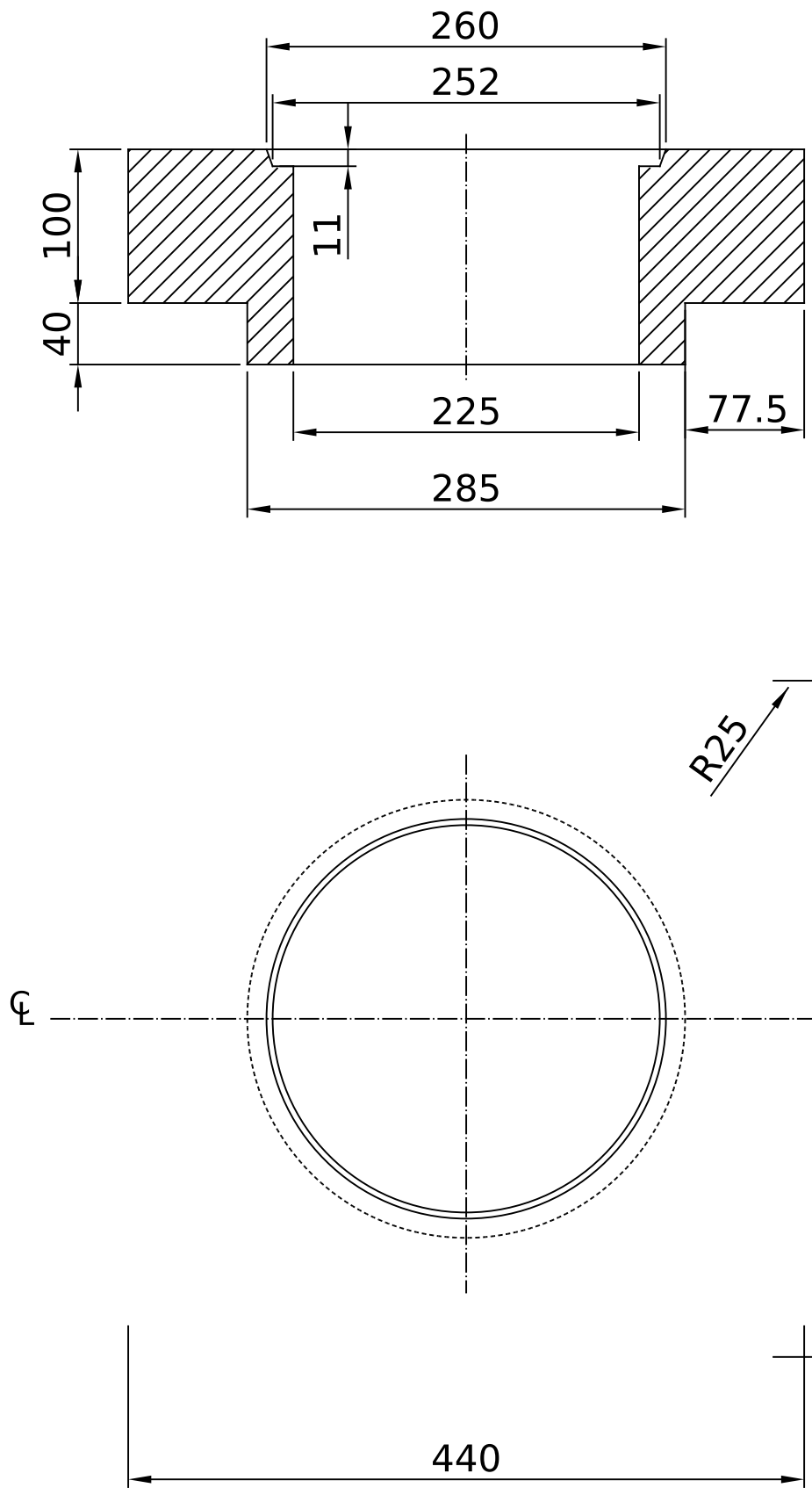

	Emne: Supportblok, Ø22,5			
	Mat.: Pimpsten	Mål: 1:5	Dato: 12.9.2011	Tegn.nr.:
Areal: 15,3 dm²	Tol.: ± 3 mm		Rev.:	912450480
Vol.: 16,3 l.				

Isokern 225mm Support Block (130731)

Dimensions in mm. Indicative only, check with us before construction. www.isokernshop.co.uk