snit i CL

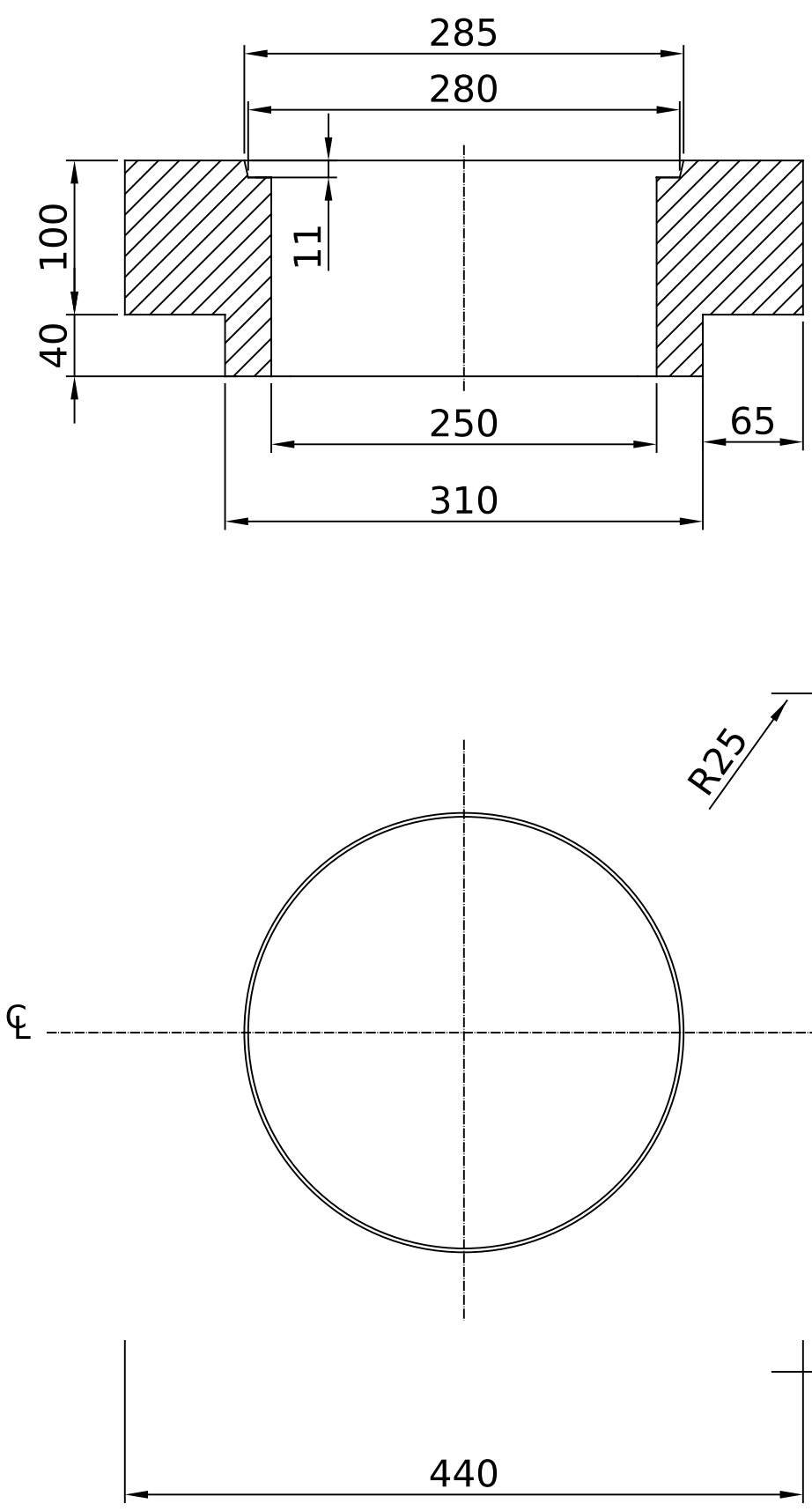

	Emne: Supportblok, Ø25			
	Mat.: Pimpsten	Mål: 1:5	Dato: 12.9.2011	Tegn.nr.:
Areal: 14,4 dm²	Tol.: ± 3 mm		Rev.:	921250480
Vol.: 15,5 l.				

Isokern 250mm Support Block (128548)

Dimensions in mm. Indicative only, check with us before construction. www.isokernshop.co.uk