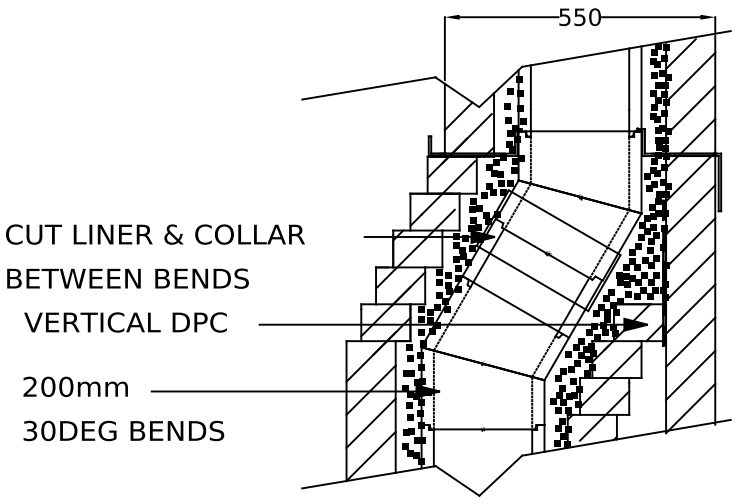

OPTIONAL BACK OFFSET AT ROOF

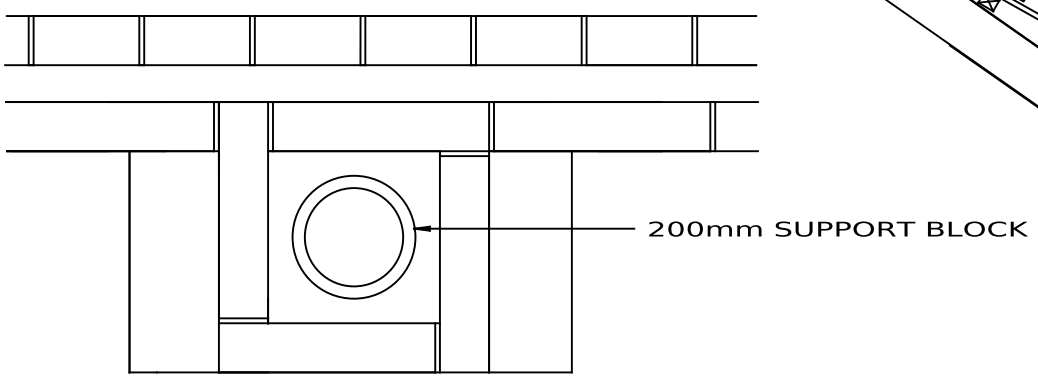

PLAN ABOVE SLAB LINTEL

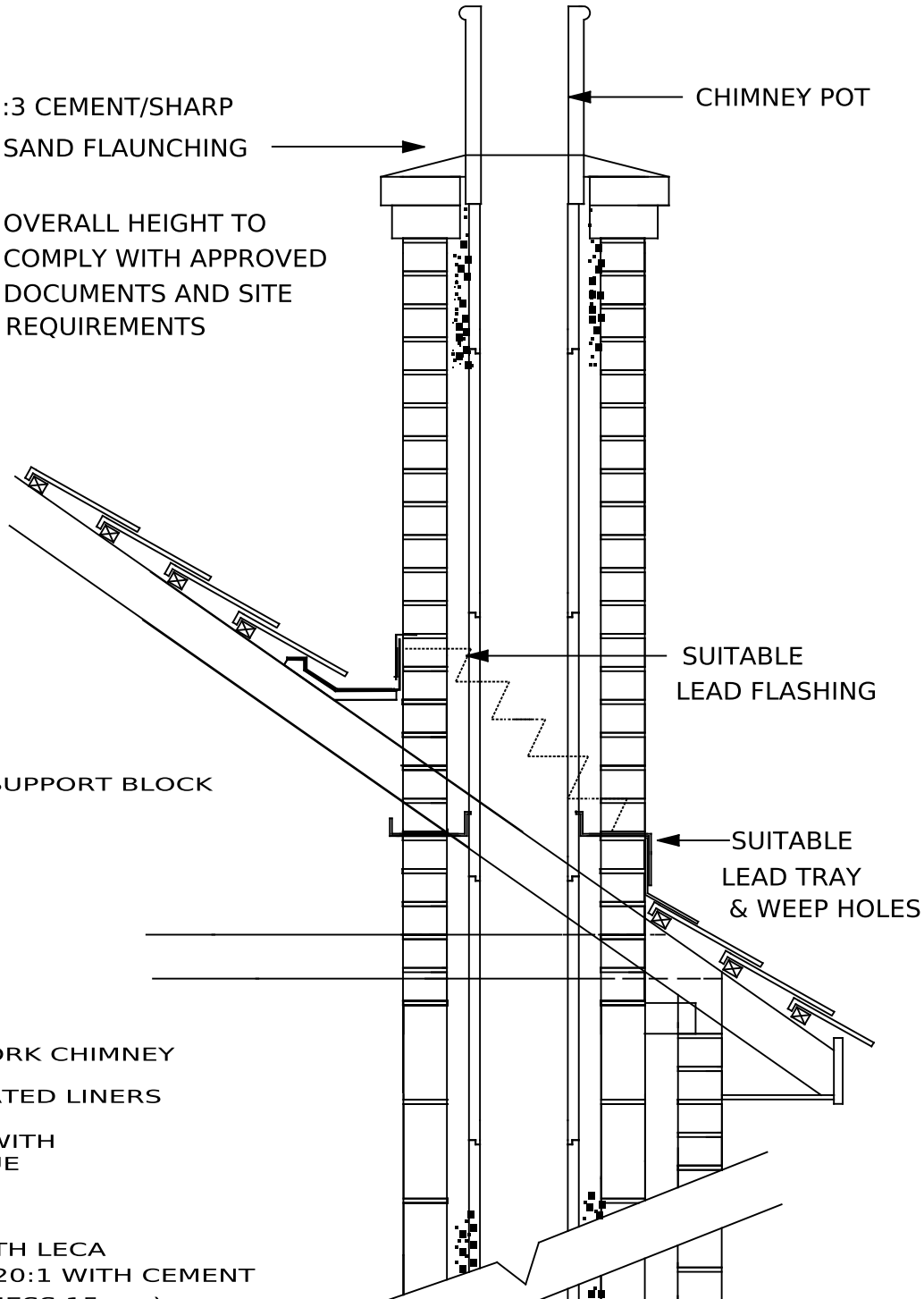

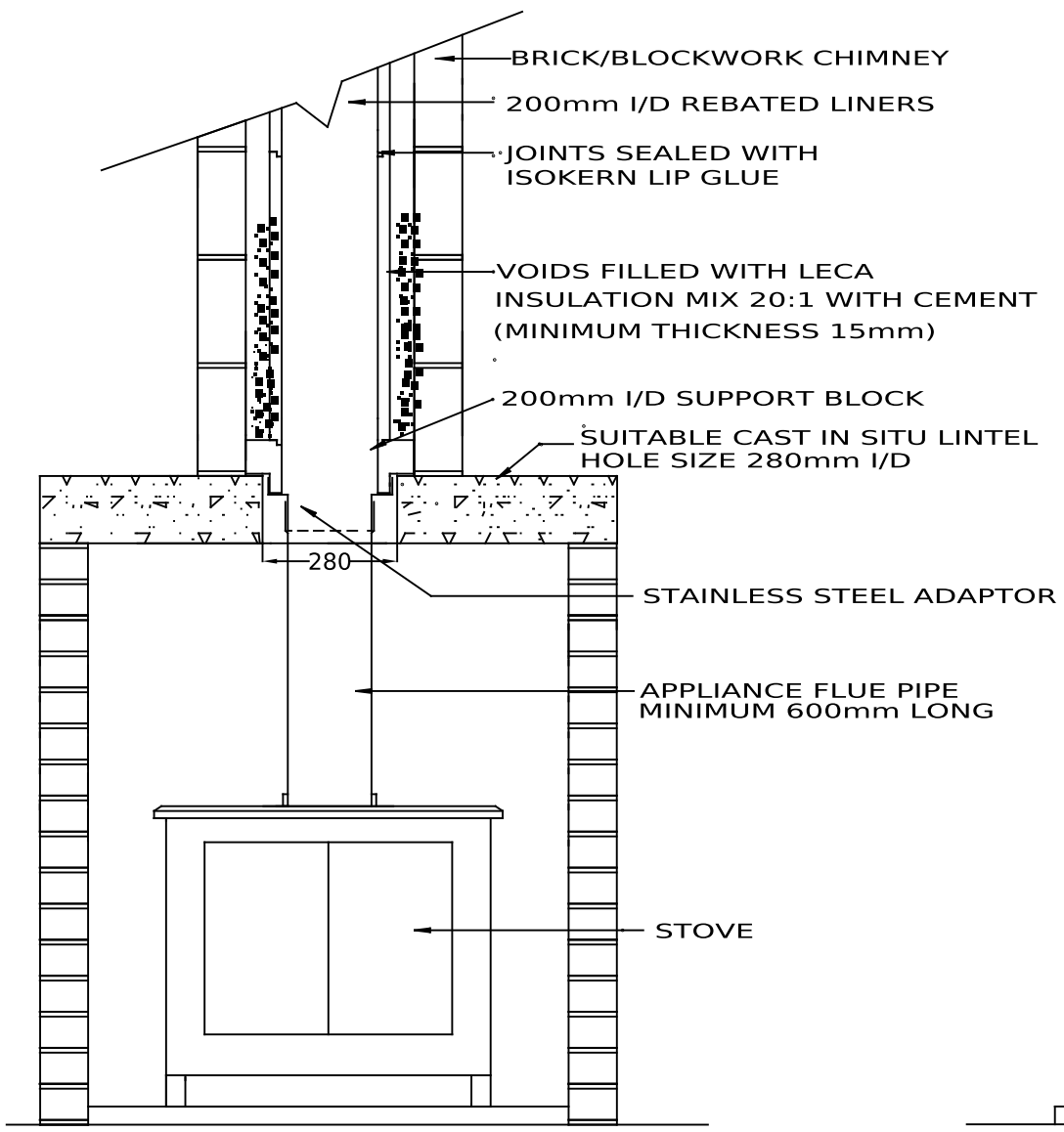

PLEASE NOTE APPLIANCE MAY
BE RAISED OFF THE GROUND

SIDE SECTION

DRAWING TITLE ISOKERN STANDARD 200mm LINER SYSTEM CONNECTING TO A STOVE	
DRAWING NO	Std 1c
SCALE	1:20
DATE	01-08-14

Isokern Installation drawing: 200mm liner, stove, internal chimney Dimensions in mm. Indicative only, check with us before construction. www.isokernshop.co.uk